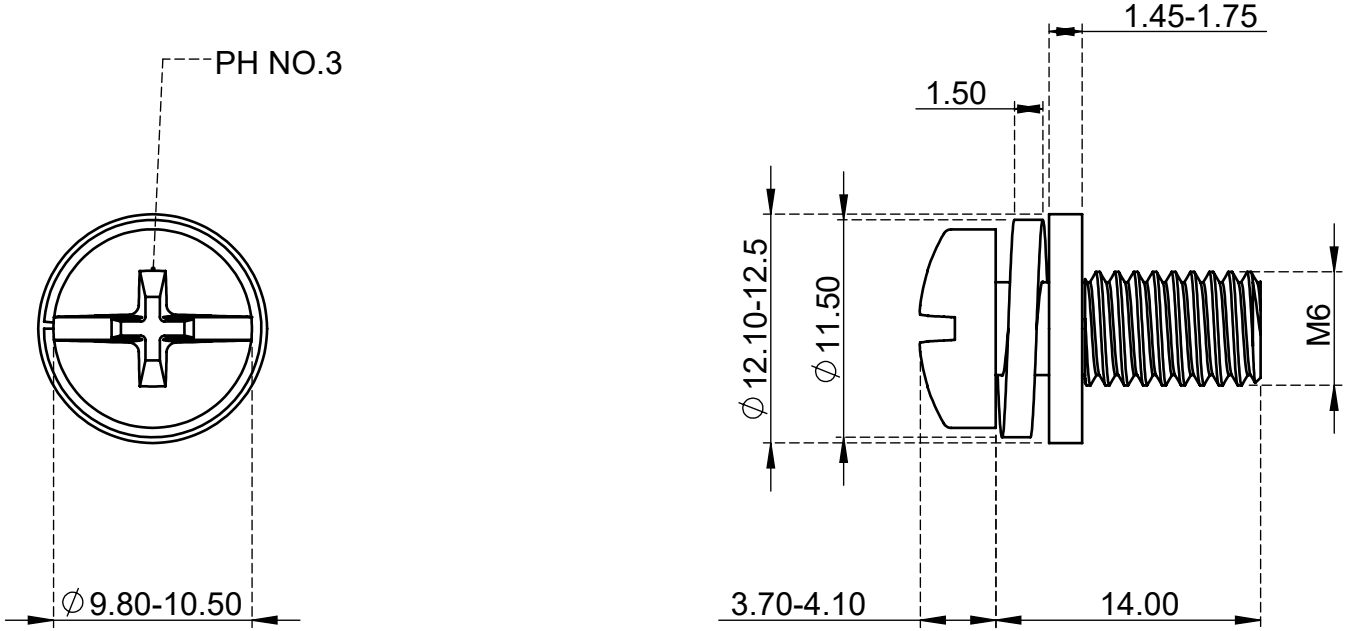

EDPCM614B

M6 x 14mm Pan Head Phillips Slot SEMS Screws with Spring and Flat Washer Steel Black

Material	Carbon Steel	Finish	Black
Weight	6.868 g	www.superneer.com	

SUPERNEER

Email : Sales@superneer.com