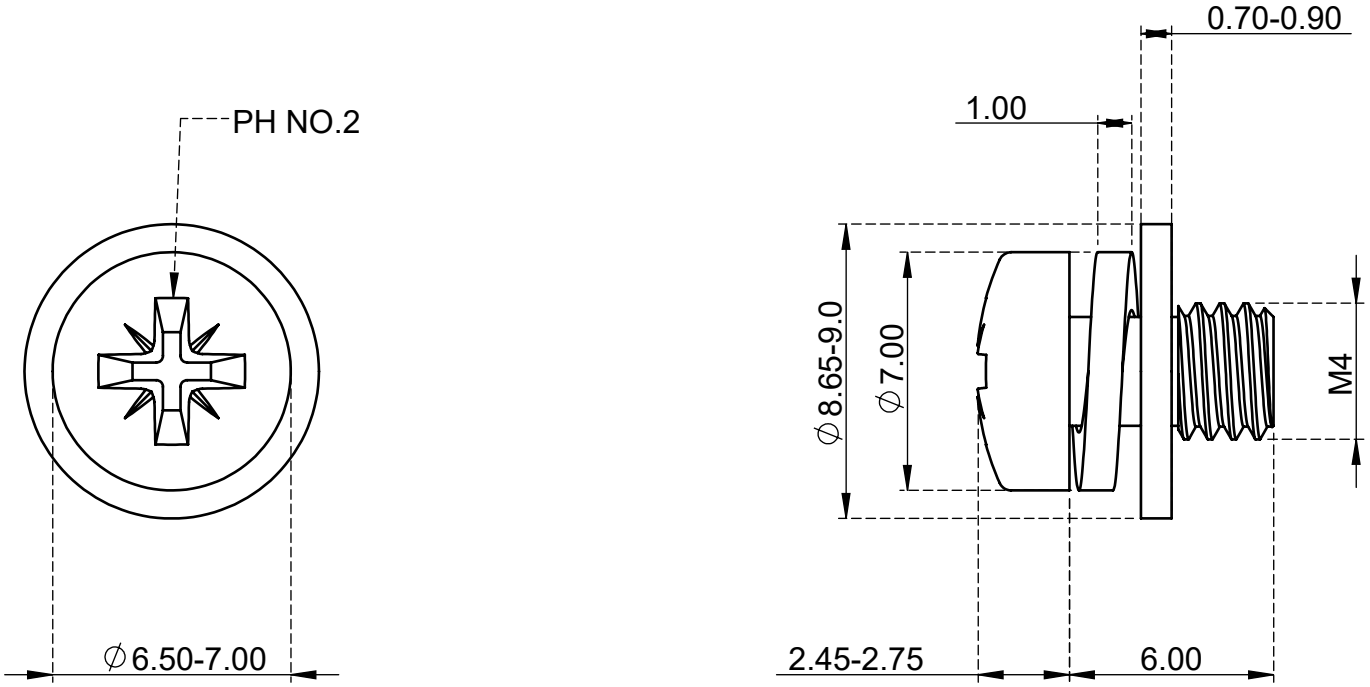

Email : Sales@superneer.com

EDPZM406B

M4 x 6mm Pan Head Pozi SEMS Screws with Spring and Flat Washer Steel Black

Material	Carbon Steel	Finish	Black
Weight	1.646 g	www.superneer.com	

SUPERNEER