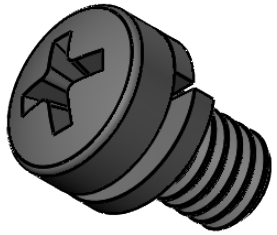

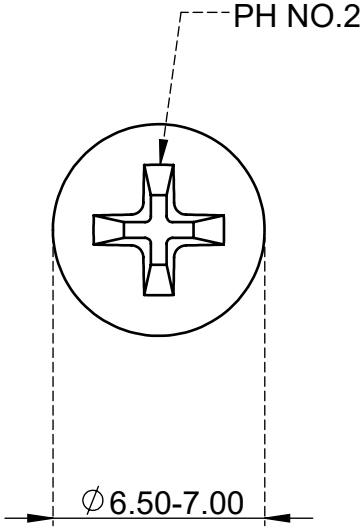

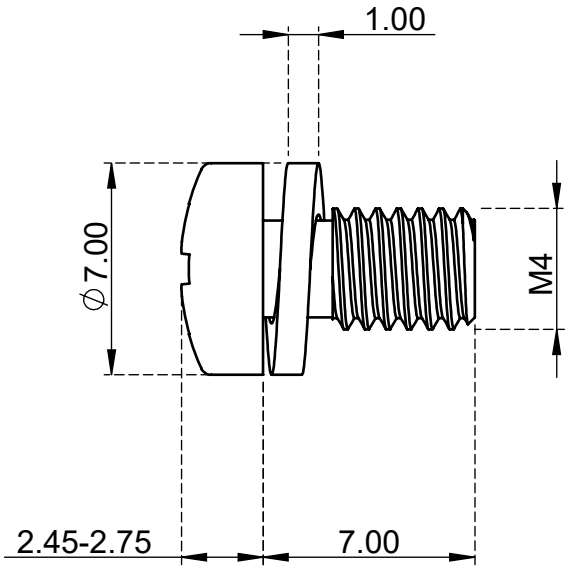

Contact: sales@superneer.com

ERPPM407B

M4 x 7mm Pan Head Phillips SEMS Screws with Spring Washer Steel Black

Material	Carbon Steel	Finish	Black
Weight	1.362 g	www.superneer.com	

SUPERNEER