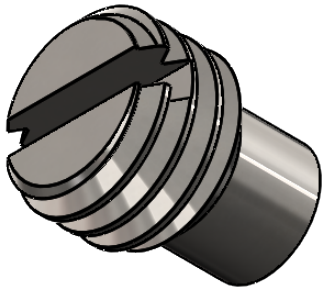

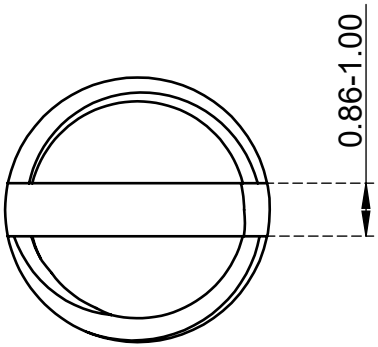

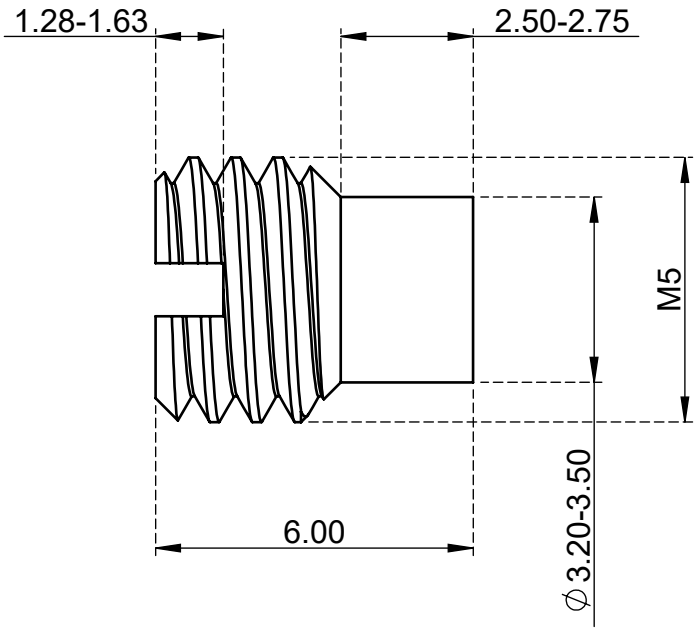

Contact: sales@superneer.com

HDLM506S

M5 x 6mm Dog Point Set Screws Slotted
SUS304 Stainless Steel DIN417

Material	Stainless Steel	Finish	Passivation
Weight	0.572 g	www.superneer.com	

SUPERNEER